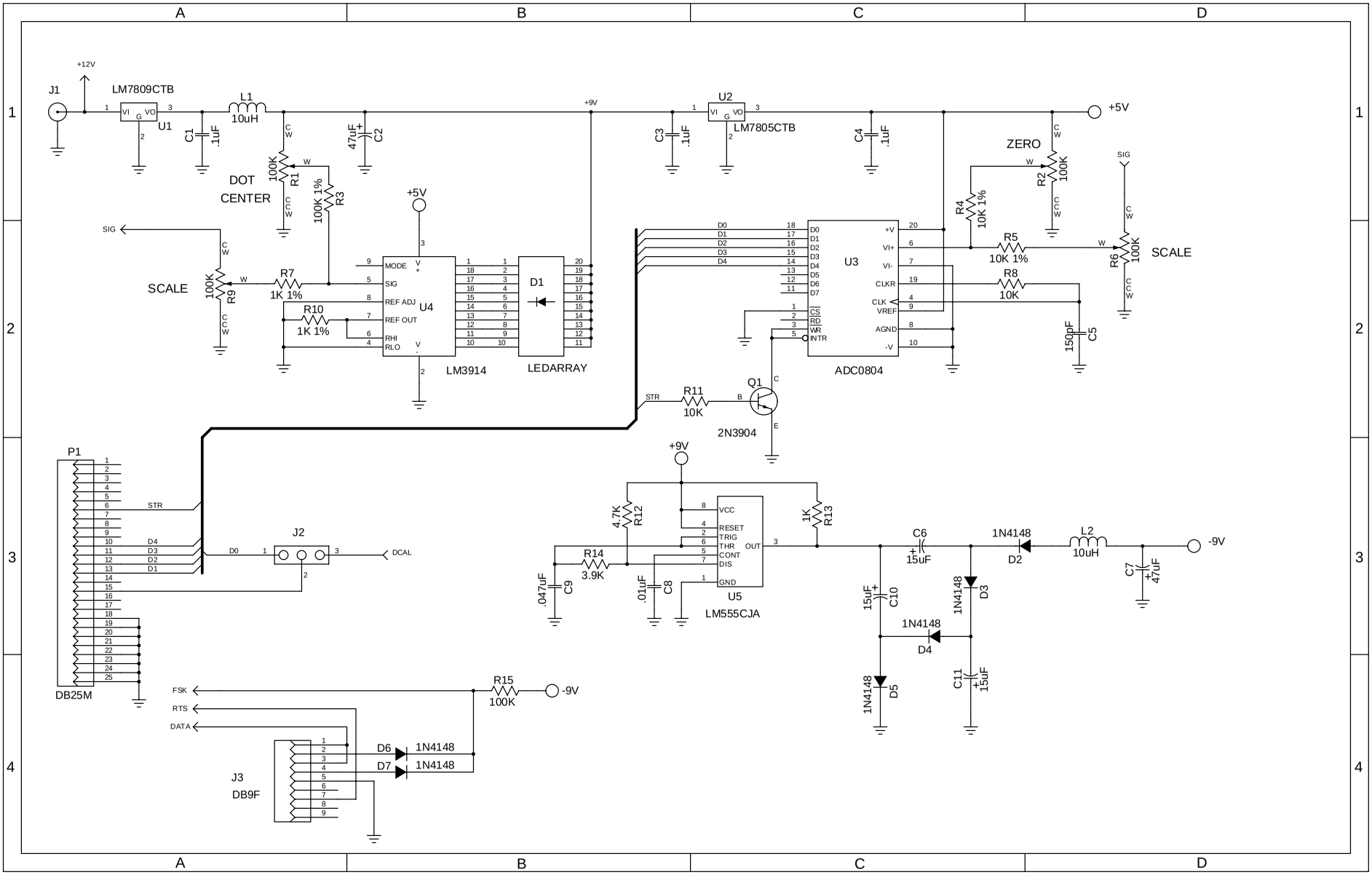
J1
+12V
LM7809CTB
U1
L1
10uH
C1
.1uF
DOT
CENTER
100K
R1
100K 1%
R3
47uF
C2
+9V
U2
LM7805CTB
C3
.1uF
C4
.1uF
+5V
ZERO
R2
100K
R4
10K 1%
R5
10K 1%
R6
100K
SCALE
SIG
R8
10K
150pF
C5
U3
ADC0804
D0
D1
D2
D3
D4
D5
D6
D7
+V
VI+
VI-
CLKR
CLK
VREF
AGND
-V
CS
RD
WR
INTR
+5V
MODE
SIG
REF ADJ
REF OUT
RHI
RLO
U4
LM3914
D1
LEDARRAY
SCALE
100K
R9
R7
1K 1%
R10
1K 1%
STR
R11
10K
Q1
2N3904
P1
DB25M
STR
D4
D3
D2
D1
D0
J2
DCAL
+9V
4.7K
R12
1K
R13
VCC
RESET
TRIG
THR
CONT
DIS
GND
OUT
U5
LM555CJA
R14
3.9K
.047uF
C9
.01uF
C8
C6
15uF
1N4148
D2
L2
10uH
-9V
C7
47uF
15uF
C10
1N4148
D3
1N4148
D4
1N4148
D5
C11
15uF
FSK
RTS
DATA
R15
100K
-9V
J3
DB9F
D6
1N4148
D7
1N4148

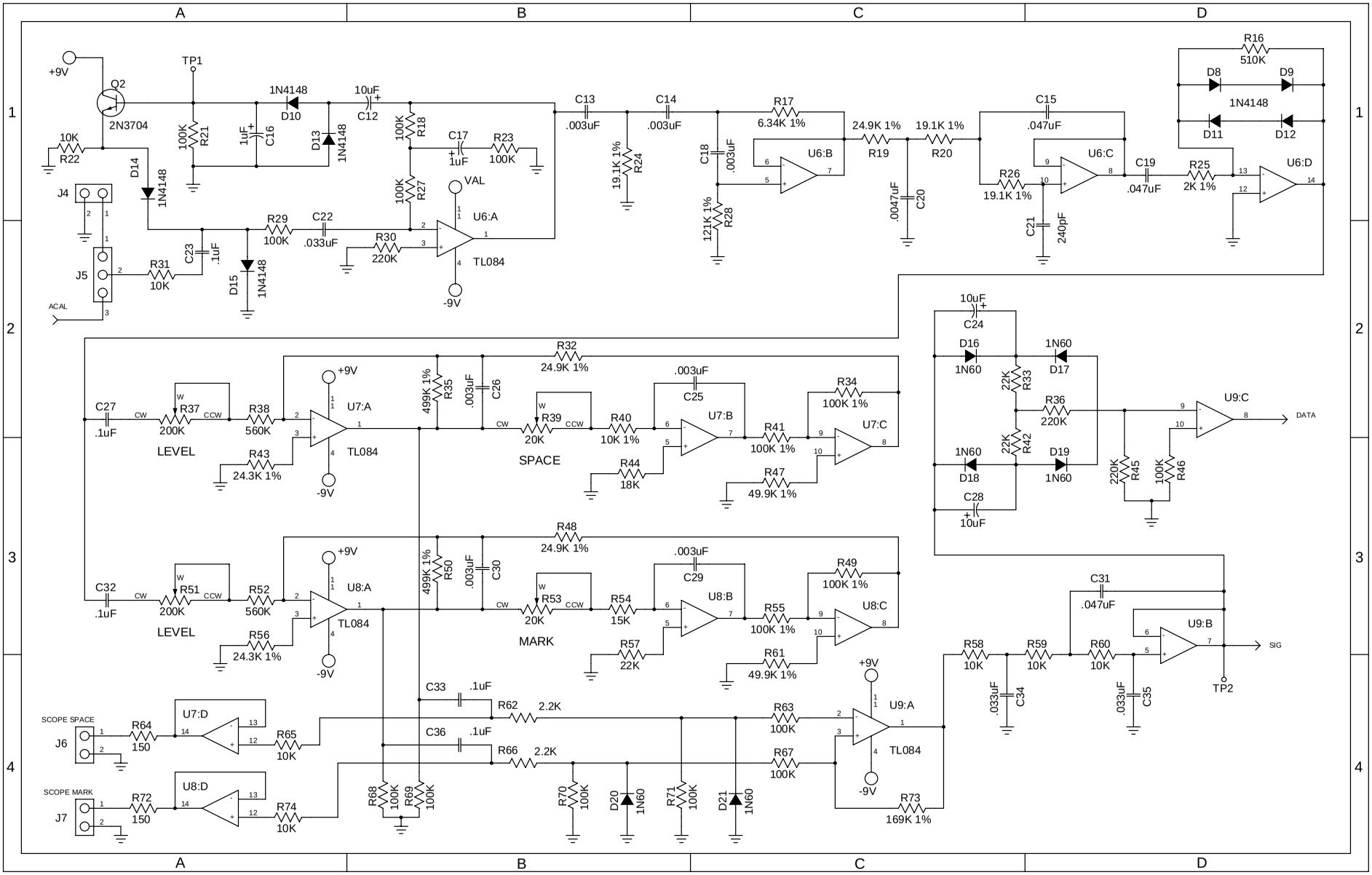
+9V
Q2
2N3704
TP1
1N4148
D10
10uF
C12
10K
R22
100K
R21
1uF
C16
D13
1N4148
100K
R18
C17
1uF
R23
100K
D14
1N4148
J4
100K
R27
VAL
U6:A
TL084
-9V
R29
100K
C22
.033uF
R30
220K
J5
R31
10K
C23
.1uF
D15
1N4148
ACAL
C13
.003uF
C14
.003uF
19.1K 1%
R24
C18
.003uF
121K 1%
R28
R17
6.34K 1%
U6:B
24.9K 1%
R19
19.1K 1%
R20
.0047uF
C20
C15
.047uF
R26
19.1K 1%
U6:C
C21
240pF
C19
.047uF
R25
2K 1%
U6:D
R16
510K
D8
D9
1N4148
D11
D12
C27
.1uF
CW
R37
200K
CCW
R38
560K
LEVEL
R43
24.3K 1%
U7:A
TL084
+9V
-9V
499K 1%
R35
.003uF
C26
R32
24.9K 1%
CW
R39
20K
CCW
SPACE
R40
10K 1%
.003uF
C25
U7:B
R44
18K
R41
100K 1%
R34
100K 1%
U7:C
R47
49.9K 1%
C32
.1uF
CW
R51
200K
CCW
R52
560K
LEVEL
R56
24.3K 1%
U8:A
TL084
+9V
-9V
499K 1%
R50
.003uF
C30
R48
24.9K 1%
CW
R53
20K
CCW
MARK
R54
15K
.003uF
C29
U8:B
R57
22K
R55
100K 1%
R49
100K 1%
U8:C
R61
49.9K 1%
10uF
C24
D16
1N60
1N60
D17
22K
R33
R36
220K
U9:C
DATA
1N60
D18
22K
R42
D19
1N60
C28
10uF
220K
R45
100K
R46
C31
.047uF
U9:B
SIG
TP2
R58
10K
R59
10K
R60
10K
.033uF
C34
.033uF
C35
SCOPE SPACE
J6
R64
150
U7:D
R65
10K
C33
.1uF
R62
2.2K
C36
.1uF
R66
2.2K
R63
100K
R67
100K
U9:A
TL084
+9V
-9V
R73
169K 1%
SCOPE MARK
J7
R72
150
U8:D
R74
10K
R68
100K
R69
100K
R70
100K
D20
1N60
R71
100K
D21
1N60

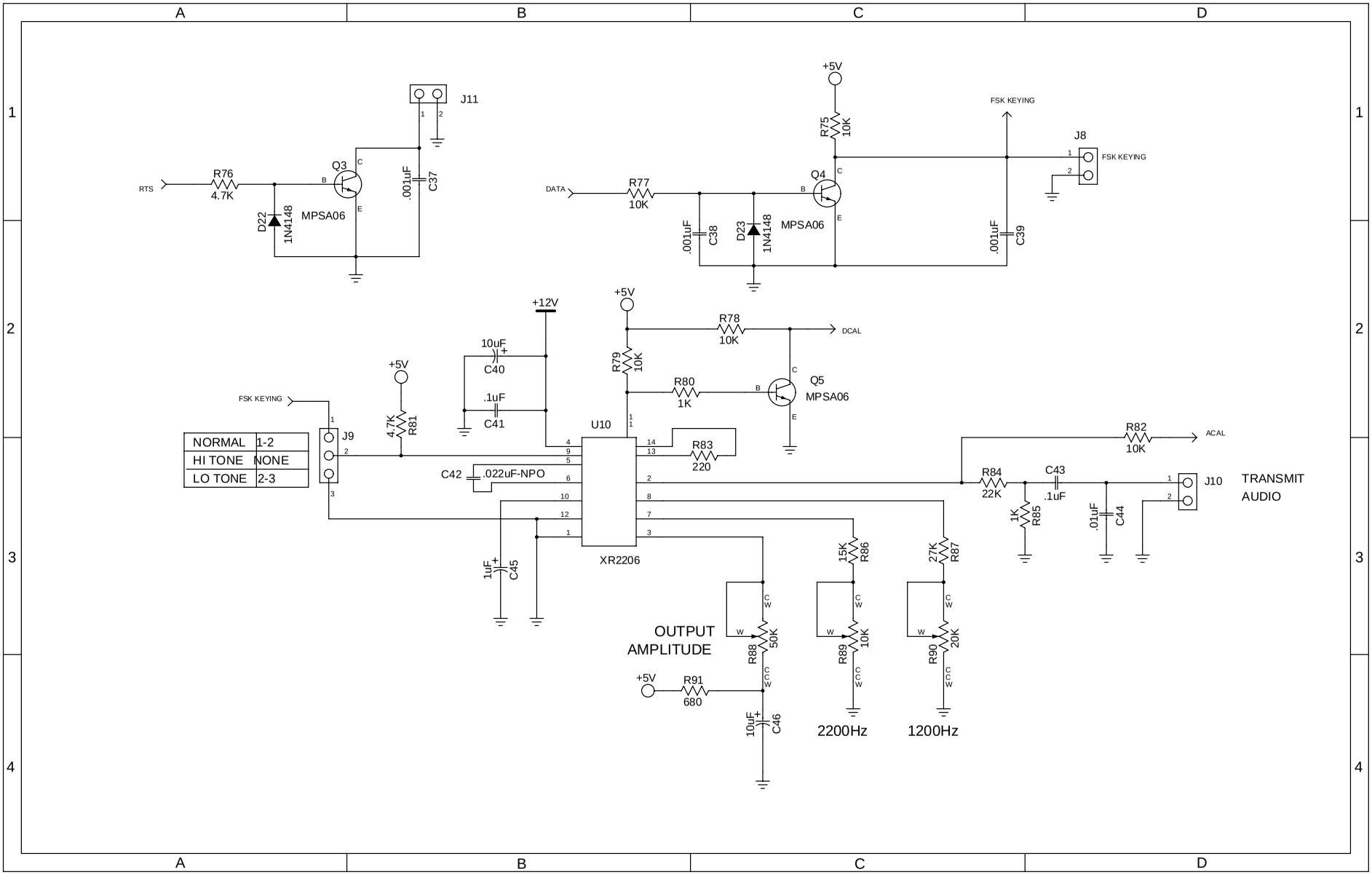
J11
RTS
R76
4.7K
Q3
MPSA06
D22
1N4148
.001uF
C37
+5V
R75
10K
FSK KEYING
J8
FSK KEYING
DATA
R77
10K
Q4
MPSA06
.001uF
C38
D23
1N4148
.001uF
C39
+12V
+5V
R78
10K
DCAL
10uF
C40
R79
10K
R80
1K
Q5
MPSA06
.1uF
C41
+5V
4.7K
R81
FSK KEYING
J9
NORMAL 1-2
HI TONE NONE
LO TONE 2-3
U10
R83
220
C42
.022uF-NPO
XR2206
1uF
C45
R82
10K
ACAL
R84
22K
C43
.1uF
1K
R85
.01uF
C44
J10
TRANSMIT
AUDIO
15K
R86
27K
R87
OUTPUT
AMPLITUDE
R88
50K
R89
10K
R90
20K
+5V
R91
680
10uF
C46
2200Hz
1200Hz